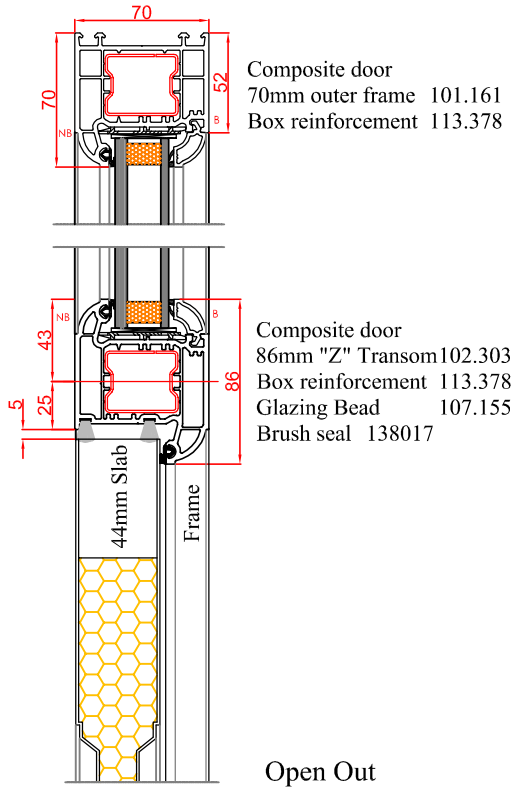
70
70
52
Composite door
70mm outer frame 101.161
Box reinforcement 113.378
43
5
25
86
Composite door
86mm "Z" Transom102.303
Box reinforcement 113.378
Glazing Bead 107.155
Brush seal 138017
44mm Slab
Frame
Open Out

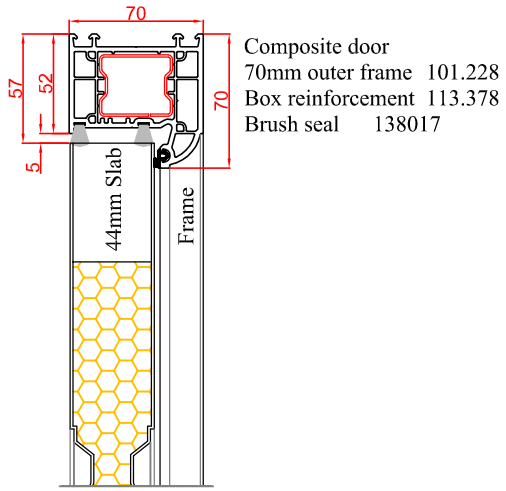
70
57
52
70
5
Composite door
70mm outer frame 101.228
Box reinforcement 113.378
Brush seal 138017
44mm Slab
Frame

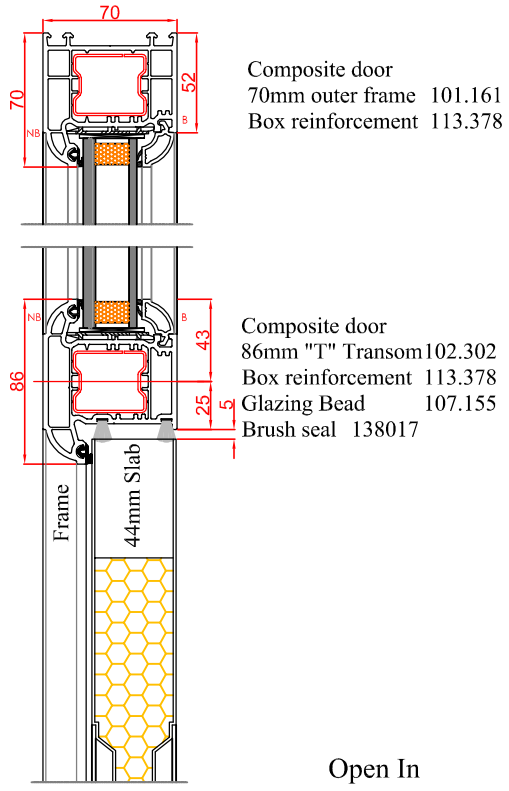
70
70
52
Composite door
70mm outer frame 101.161
Box reinforcement 113.378
86
43
25
5
Composite door
86mm "T" Transom102.302
Box reinforcement 113.378
Glazing Bead 107.155
Brush seal 138017
Frame
44mm Slab
Open In

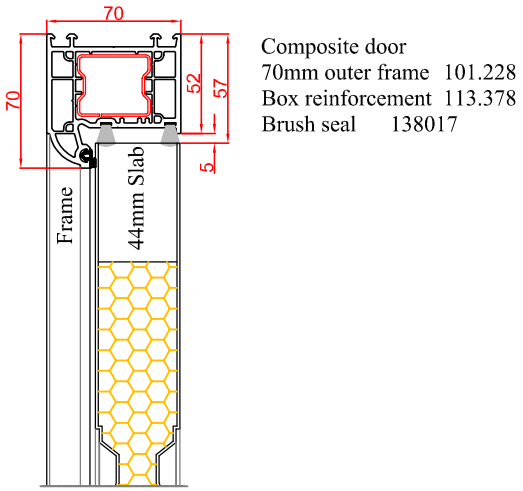
70
70
52
57
5
Composite door
70mm outer frame 101.228
Box reinforcement 113.378
Brush seal 138017
Frame
44mm Slab

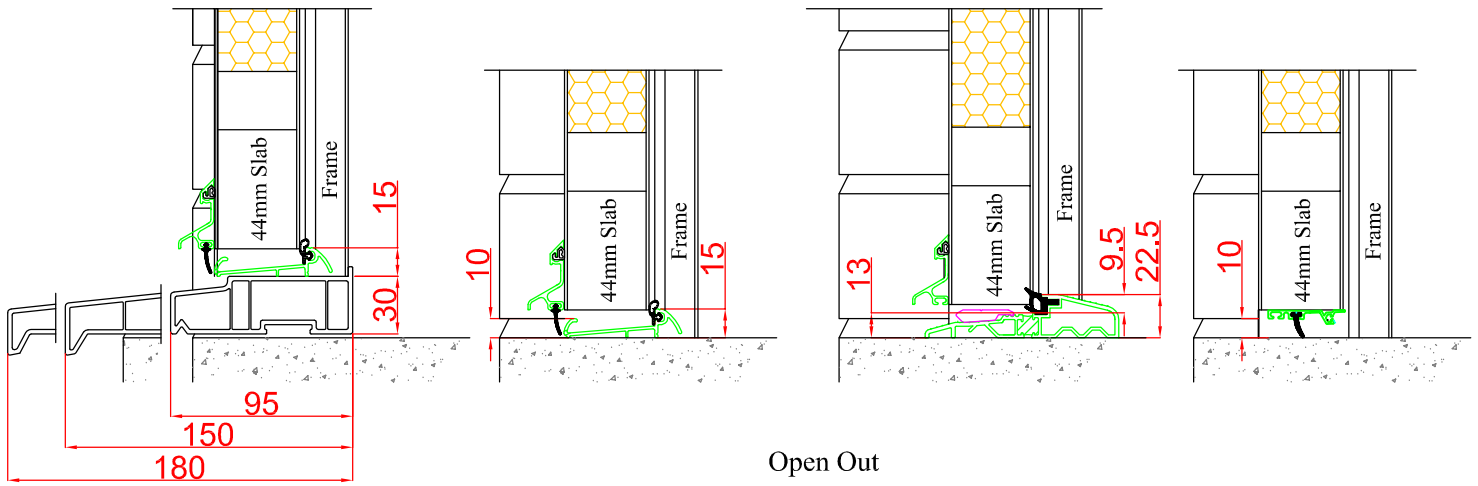
44mm Slab
Frame
15
30
95
150
180
10
15
13
9.5
22.5
Open Out

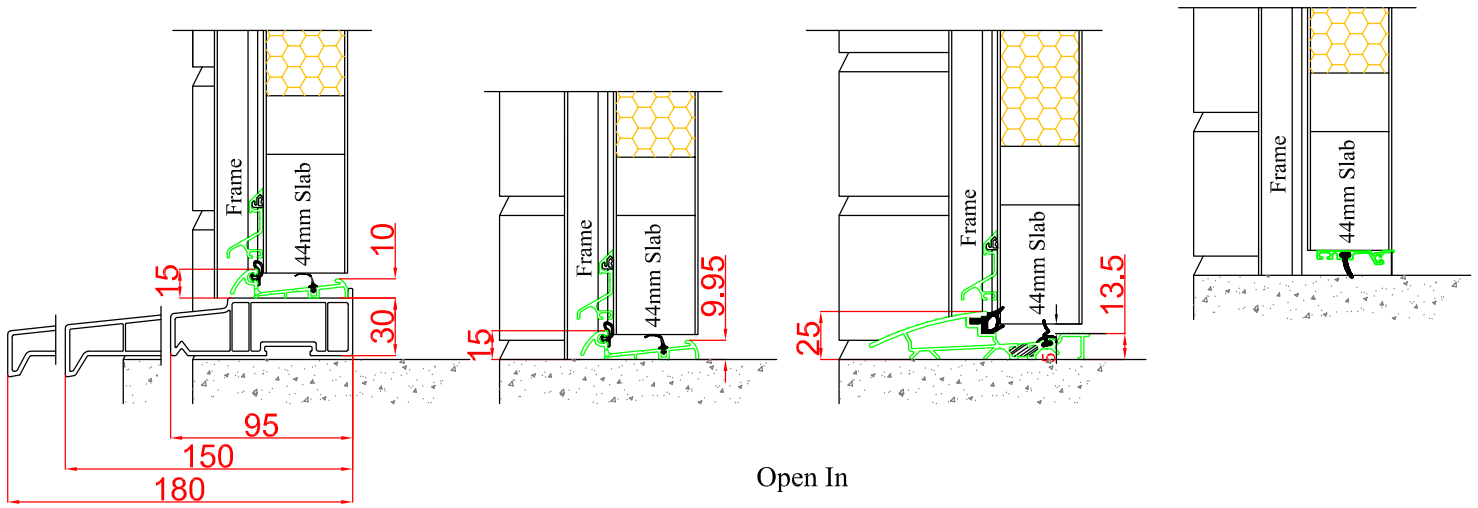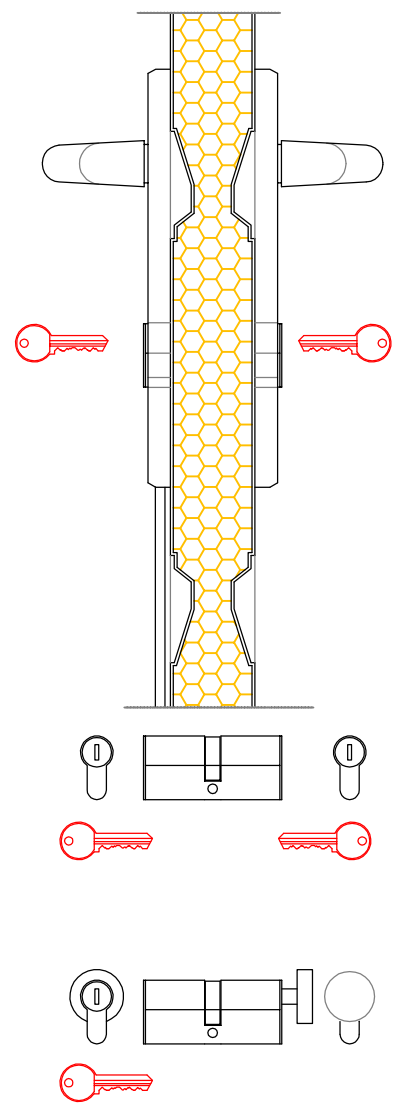
Frame
44mm Slab
15
10
30
95
150
180
9.95
25
13.5
Open In